LET
LIGHT
ALULED
LIVE

photometric test RING

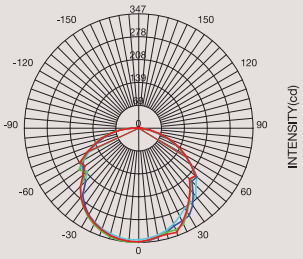

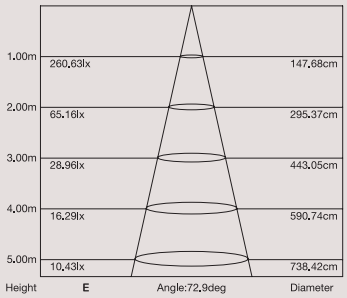

colors

white / bianco
RAL 9010

dove / tortora
RAL 1019

grey / grigio
RAL 7031

black / nero
RAL 9005

concrete / cemento

ALULED RING

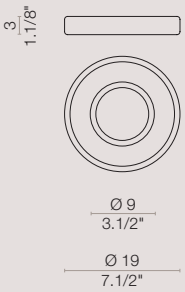

PROJECT: TYPE:

MODEL #	FINISH/COLOUR	WATTAGE	LIGHT SOURCE	VOLTAGE
	-	-	-	-

[En] → Lighting fixture in carved solid aluminium, powder-coated available in 4 colors and concrete finish. White PMMA diffuser. LED 220-240V. 359° adjustable version as ceiling lamp. Frame in powder-coated aluminium, available in 4 colors. Chromed metal joint.

[It] → Corpo illuminante in alluminio ricavato dal pieno verniciato a polveri nei 4 colori disponibili e finitura cemento. Diffusore in PMMA bianco. Sorgente LED 220-240V. Versione orientabile 359° plafoniera. Montatura in alluminio verniciato a polveri nei 4 colori disponibili. Snodo metallo cromato.

material

aluminium
alluminio

light source

LED 220-240V

120V for
NORTH AMERICA

Dimmer not included
Dimmer non incluso

equipment

PL 10 - 30 - 70 1L
19W LED 3000°K lm1500

PL 10 - 30 - 70 2L
38W LED 3000°K lm3000

symbols

IP 20 DIM TRIAC eco

IP 20 DIM TRIAC eco

dimensions

PL 30 1L

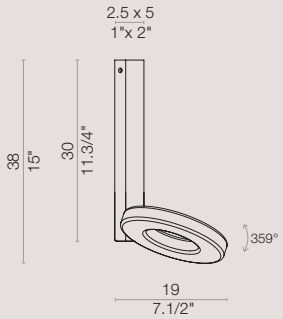

PL 70 1L

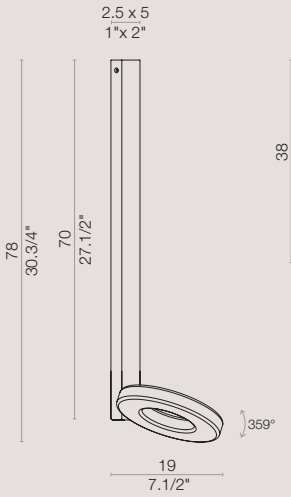

PL 30 2L

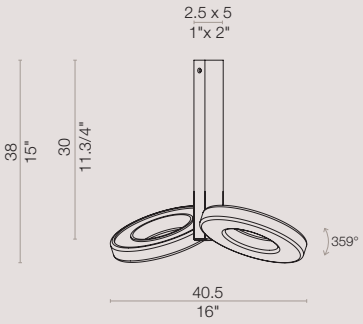

PL 70 2L

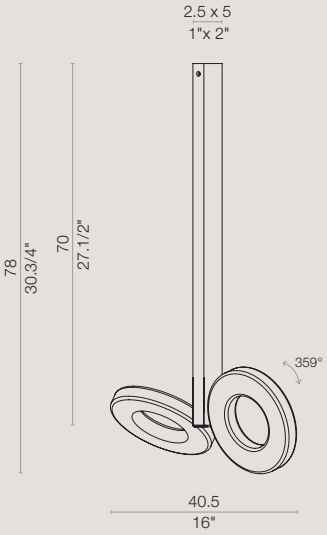

ALULED™
→ ring

[En] → The large lighting fixture with the shape of a ring, made from a carved solid aluminium, fits perfectly around the LED lighting source, giving volume and shape to the light.

[It] → Il grande corpo luminoso a forma di anello, ricavato da un pieno in alluminio, avvolge perfettamente la sorgente luminosa a LED, dando volume e forma alla luce.

ALULED™ ring

PL 30 1L
ceiling lamp

dimensions
L 19 x H max 38 cm

color
white 9010

[En] → Due to its size, ALULED RING is only available in the ceiling version, with single or double lighting sources, both adjustable.

[It] → ALULED RING, date le sue dimensioni, è disponibile solo nella versione a soffitto, con singolo o doppio corpo illuminante ruotabile.